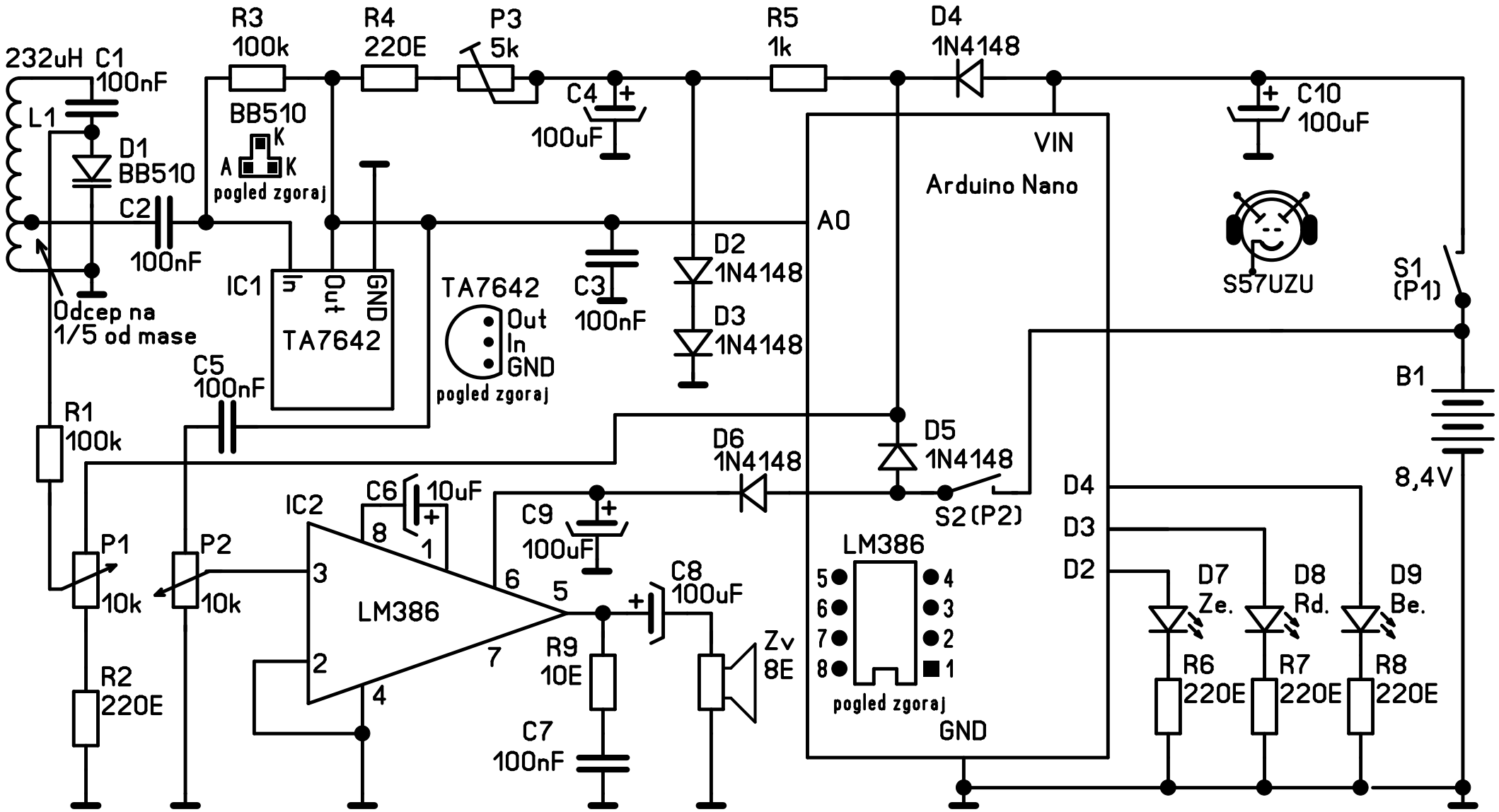
232uH
L1
C1
100nF
D1
BB510
C2
100nF
Odcep na
1/5 od mase
R3
100k
BB510
K
A
K
pogled zgoraj
R4
220E
P3
5k
C4
100uF
R5
1k
D4
1N4148
C10
100uF
VIN
Arduino Nano
A0
IC1
In
Out
GND
TA7642
TA7642
Out
In
GND
pogled zgoraj
C3
100nF
D2
1N4148
D3
1N4148
S57UZU
S1
(P1)
B1
8,4V
C5
100nF
R1
100k
D6
1N4148
D5
1N4148
S2 (P2)
D4
D3
D2
C6
10uF
IC2
C9
100uF
P1
10k
P2
10k
LM386
C8
100uF
Zv
8E
R9
10E
C7
100nF
R2
220E
LM386
pogled zgoraj
GND
D7
Ze.
D8
Rd.
D9
Be.
R6
220E
R7
220E
R8
220E